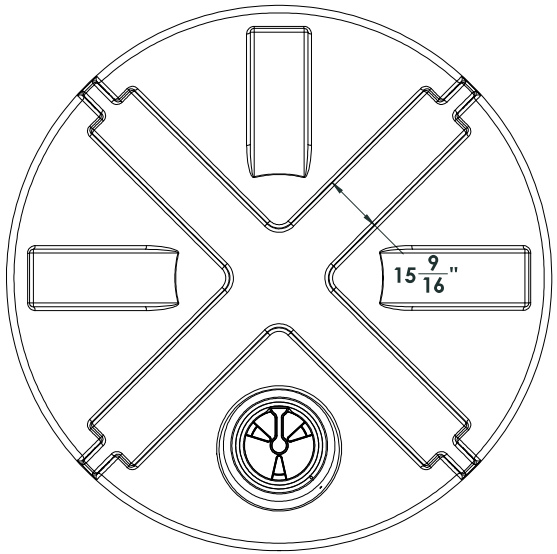

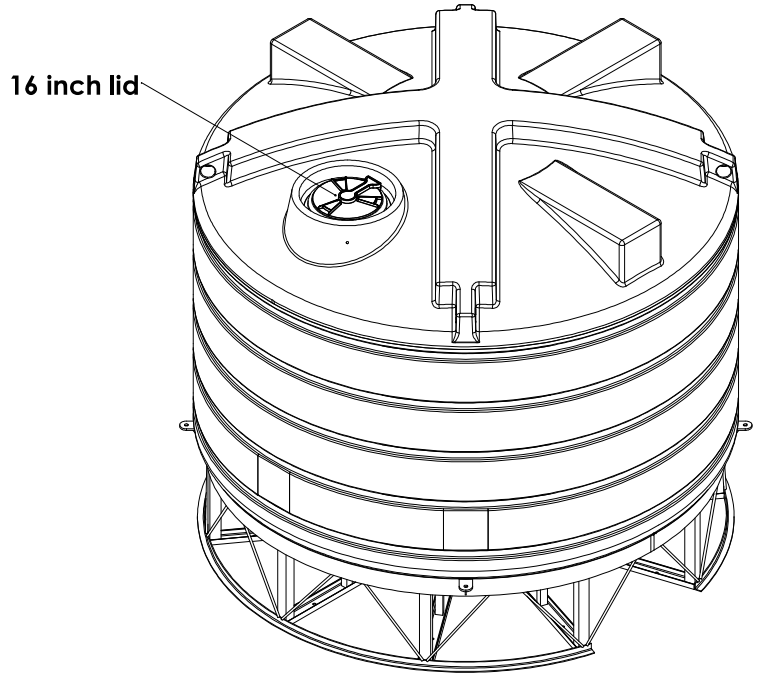

Shown with AZFC06011 stand

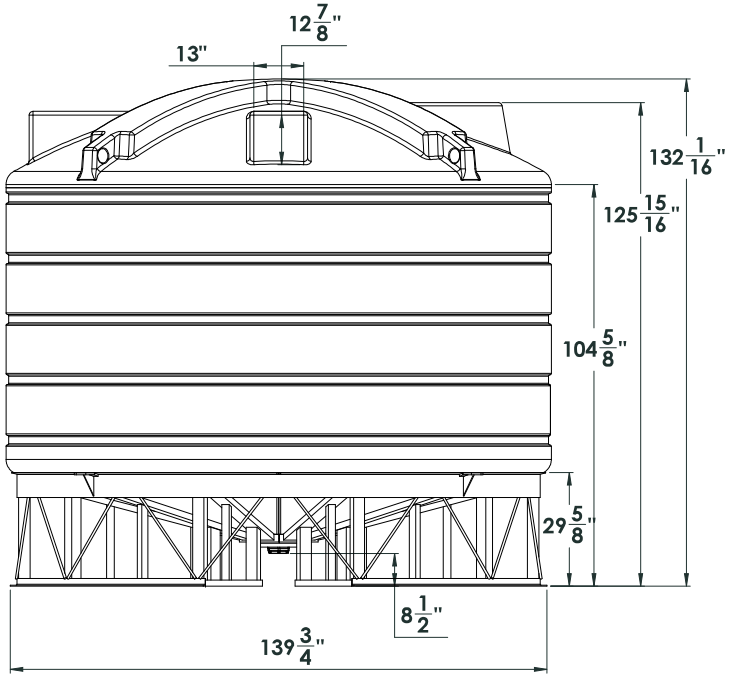

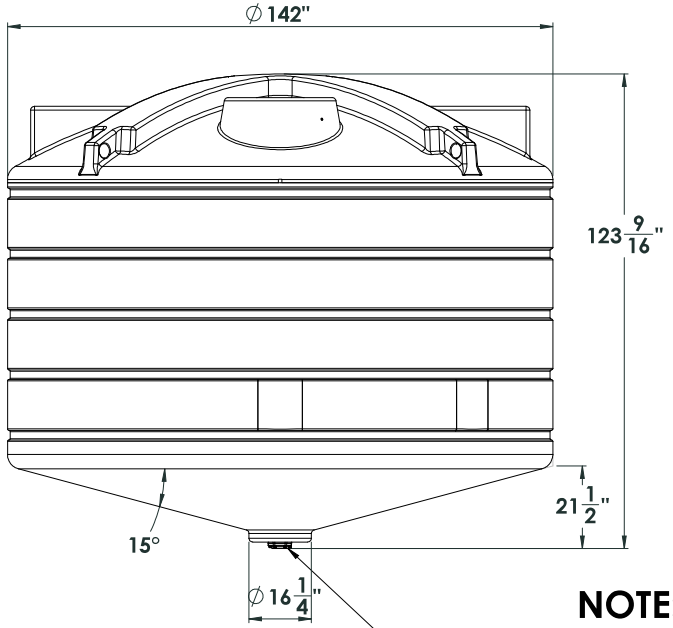

3 inch bolted - bottom drain fitting

NOTE: Allow +/- 1.5% Shrinkage

PROPRIETARY AND CONFIDENTIAL

THE INFORMATION CONTAINED IN THIS DRAWING IS THE SOLE PROPERTY OF **ENDURAPLAS LLC**. ANY REPRODUCTION IN PART OR AS A WHOLE WITHOUT THE WRITTEN PERMISSION OF **ENDURAPLAS LLC** IS PROHIBITED.

NEXT ASSY	USED ON	UNLESS OTHERWISE SPECIFIED:		NAME	DATE
		DIMENSIONS ARE IN INCHES TOLERANCES: FRACTIONAL ± ANGULAR: MACH ± BEND ± TWO PLACE DECIMAL ± THREE PLACE DECIMAL ±	DRAWN	DNS	11/2/16
			CHECKED		
			ENG APPR.		
			MFG APPR.		
		INTERPRET GEOMETRIC TOLERANCING PER:	Q.A.		
		MATERIAL	COMMENTS:		
		FINISH			
APPLICATION		DO NOT SCALE DRAWING			

ENDURAPLAS LLC

TITLE: **THC06011**

SIZE	DWG. NO.	REV
C		1

SCALE: 1:50 WEIGHT: SHEET 1 OF 1